SPECIFICATION APPLIED

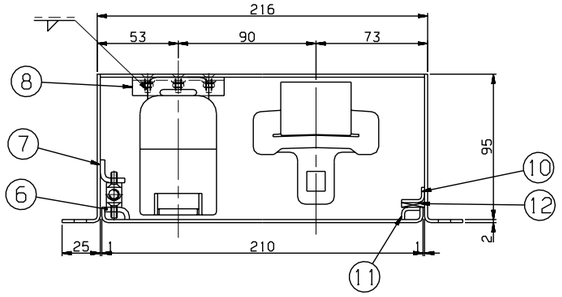

SECTION C-C

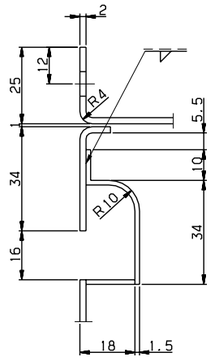

DETAIL D
SCALE=1/1

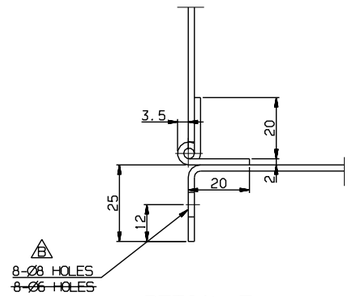

DETAIL E
SCALE=1/1

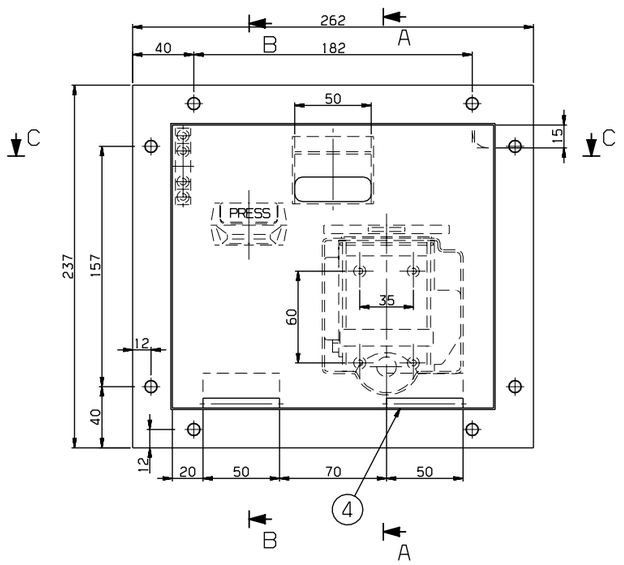

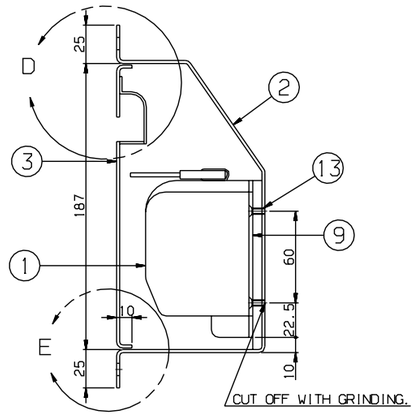

SECTION A-A

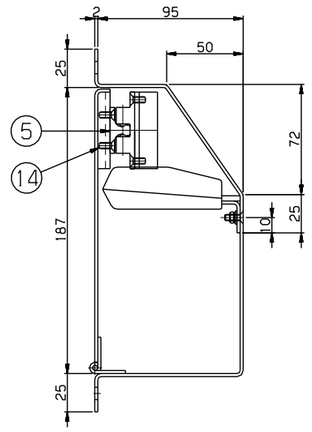

SECTION B-B

NOTE
1. THE SURFACE SHALL BE HAIRLINE #180, AND VISUAL SURFACE SHALL BE BUFFING.
2. THE SHARP EDGE SHALL BE REMOVED.
3. INDIRECT INSTALLATION SHALL BE WELDED BY FILLET-WELDING.
4. THIS PART SHALL BE MASS-PRODUCED AFTER SAMPLE'S APPROVAL.
5. INSIDE BOX SHALL BE PAINTED BY BEIGE COLOR.

품번 NO.	부품 번호 PART NO.	품명 DESCRIPTION	재질 MATERIAL	수량 Q'TY	중량 W.T	비고 REMARKS
14	RFP90006AN0-014	SCREW F.H	SUS304	4		M4x10
13	RFP90006AN0-013	SCREW F.H	SUS304	7		M4x12
12	RFP90006AN0-012	PACKING	SPONGE RUBBER	1		T3x15x15
11	RFP90006AN0-011	BRACKET	SUS304	1		PL T2x8x10
10	RFP90006AN0-010	BRACKET	SUS304	1		PL T2x10x15
9	RFP90006AN0-009	BRACKET	SUS304	1		T6x110x90
8	RFP90006AN0-008	BRACKET	SUS304	1		LA T2x12x20x60
7	RFP90006AN0-007	BRACKET	SUS304	1		LA T3x15x16
6	RFP90006AN0-006	BRACKET	SUS304	1		LA T3x8x16
5	RFP90008AN0	BALL CATCHER	ASS'Y	2		
4	RFP90006AN0-004	HINGE	SUS304	1		T5
3	RFP90006AN0-003	COVER	SUS304	1		T2
2	RFP90006AN0-002	BOX	SUS304	1		T2
1	RFP90007AN0	BELT WHEEL CHAIR	ASSY	1		Ø25xT2

승인 APP	H.G.RYU 2008.10.15	재질 MAT'L	ASSY	마 감 FINISH	BOX, WHEEL CHAIR, BELT
검도 CHK	H.S.KIM 2008.10.15	총중량 G.W		TITLE	
설계 DGN	Y.D.KIM 2008.10.10	일반공차 GENERAL TOLERANCE	MC MD CT	도면 번호 DRG. NO	MS RFP90006AN0 Ver. 00 Rev. -B 3D5101
제도 DRG	S.H.SONG 2008.10.10		B B B	SCALE 1/2	SHEET 1 of 1 RFP-
				SIZE A1	넌-PRJT

HYUNDAI Rotem 현대로템주식회사

참조 REF. NO. FPP12268

기호 MARK	일자 DATE	변경 내역 DETAIL OF REVISION(E.C ZONE)	설변번호 E.C NO.	설계 DGN	검도 CHK	승인 APP
BX1	2011.03.24	CHANGED HOLE	3D5101-U151	Y.T.KIM	K.B.PARK	J.H.PARK
AX1	2009.04.23	CHANGED HOLE	3D5101-U033	Y.D.KIM	H.S.KIM	H.G.RYU

일반공차 GENERAL TOLERANCE			
구분 CLASS		A	B
용접 WELDING	~ 400	2	4
	~ 30	2	3
	~ 10	1	1.5
	< 3	0.5	1
치수 DIM	~ 3150	-	7
	~ 1600	4	5
	~ 800	3	4
	~ 400	2	3
	~ 200	1.5	2
	~ 100	1	1.5
등급 GRADE		A	B
주강, 주조 CASTING (±)			
~ 20M	8	16	24
~ 15M	7	12	20
~ 12M	6	10	18
~ 8M	5	8	14
~ 4M	4	6	11
~ 2M	3	4	8
~ 1M	2	3	6
~ 315	1	2	4
~ 120	1	2	3
~ 30	1	1	1
등급 GRADE	A	B	C
절삭 가공품 MACHINING (±)			
~ 20M	-	6.0	8.0
~ 15M	-	5.0	7.0
~ 12M	-	4.0	6.0
~ 8M	-	3.0	5.0
~ 4M	0.8	2.0	4.0
~ 2M	0.5	1.2	3.0
~ 1M	0.3	0.8	2.0
~ 315	0.2	0.5	1.2
~ 120	0.15	0.3	0.8
~ 30	0.1	0.2	0.5
3~6	0.05	0.1	0.2
등급 GRADE	A	B	C
가공시방품 일반공차표 GENERAL TOLERANCE			

본 도면은 당사 재산권에 해당합니다 무단복사/배포 금지함. PROPERTY OF ISSUING ENTITY, CANNOT BE DISTRIBUTED OR REPRODUCED WITHOUT AUTHORIZATION.

CATIA